Serial and Parallel Transmission: A Brief History

David Falconer
Dept. of Systems and Computer Engineering
Carleton University
Ottawa, Ontario, Canada
ddf@sce.carleton.ca

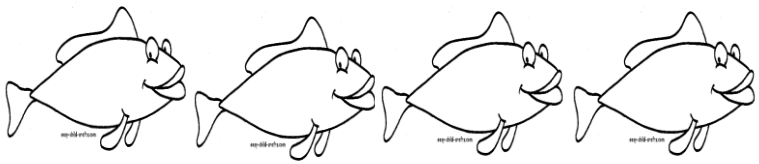

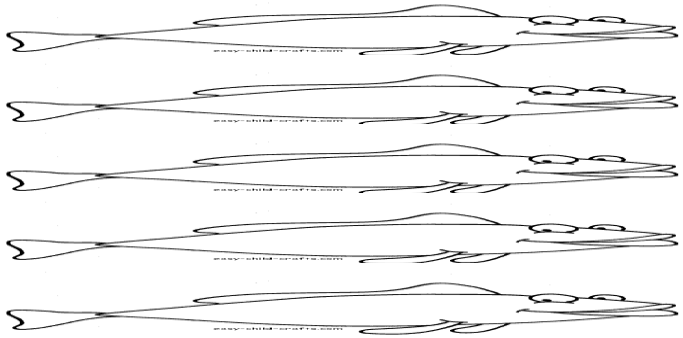

In the Beginning…Serial Transmission

- **Electrical telegraphy**: 1839 – (William Cooke, Charles Wheatstone, Samuel Morse)

  "What hath God wrought"

  .-- .... .- - / .... .- - .... / --. --- -.. / .-- .-. --- ..- --. .... –

Samuel F.B. Morse

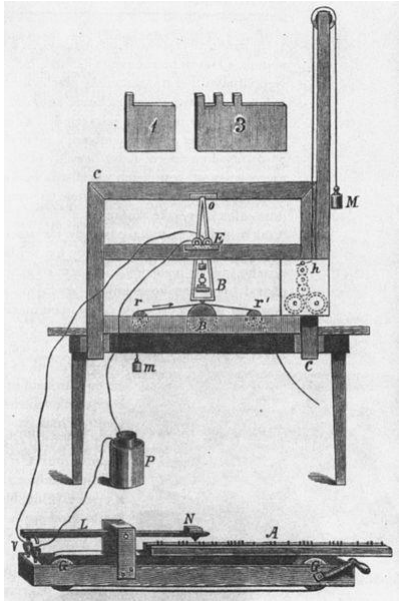

Original Morse telegraph

Sources: Inventors' hall of fame; Wikipedia

Frequency Division Multiplex (FDM) Transmission

- **Harmonic telegraph**: 1873-76 (Alexander Graham Bell, Elisha Gray, Thomas Edison)
  - Several telegraph signals sharing the same wires – modulation using electromechanical oscillators

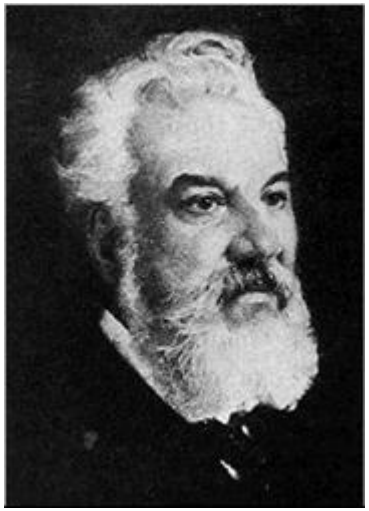

Bell

Gray

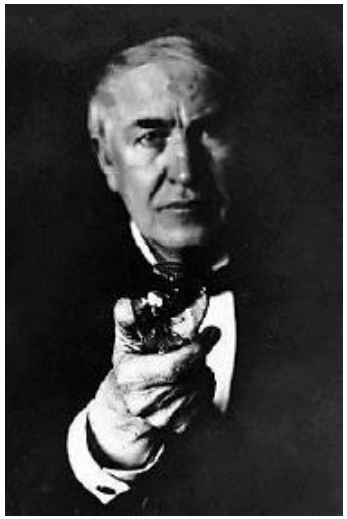

Edison

Bell's harmonic telegraph

Sources: Wikipedia, Lucidcafe, Science & Society Picture Library

Carleton UNIVERSITY

Serial Transmission Again: the Advent of Digital Radio

- **Spark gap-excited transmitters (ultra wideband!)** 1887-1920: Hughes, Hertz, Oliver, Tesla, Marconi

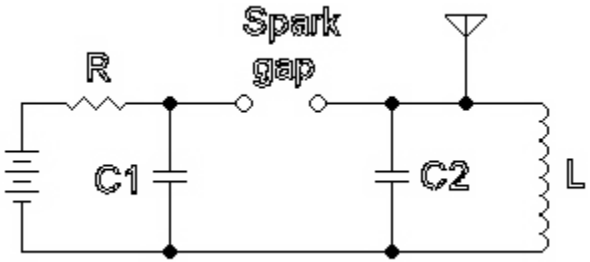

Spark gap transmitter circuit

Guglielmo Marconi

Source: Wikipedia

FDM Again and Analog Radio

- **Multiple radio signals transmitted in parallel modulated on separate (electromechanically generated) carriers** 1900-1920: Reginald Fessenden.
- **Electronic oscillators to generate carriers, superheterodyne receivers, frequency modulation** 1914-33: Edwin H. Armstrong

Reginald Fessenden

Edwin H. Armstrong

Source: Wikipedia

Serial Transmission on Dispersive Channels: Equalizers

- **Line equalization with loading coils** 1854-1911 (William Thompson (Lord Kelvin), Oliver Heaviside, George Campbell, Michael Pupin)
- **Adaptive time domain transversal equalizers** 1964: R.W. Lucky
- **Minimum adaptive MSE equalization** 1965: D.C. Coll and D. George.

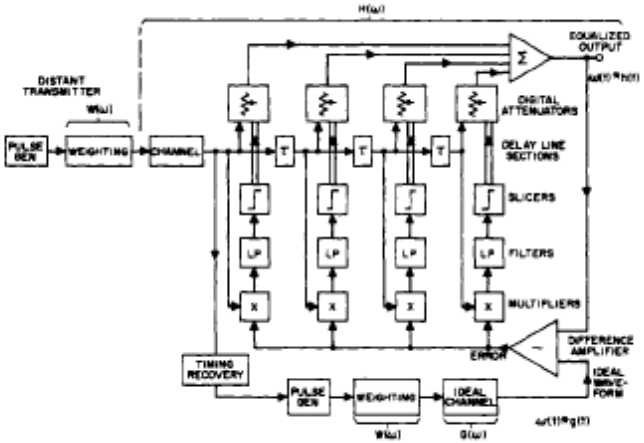

Fig. 1. Generalized automatic equalizer.

Source: R.W. Lucky and H.R. Rudin , “Generalized Automatic Equalization for Communication Channels”, Proc. IEEE, March 1966.

Carleton UNIVERSITY

Multicarrier Transmission: The Origins of OFDM

- **Multicarrier transmission of a single data stream – Kineplex** (Doelz, Heald and Martin, Proc. IRE,May 1957), **KATHRYN** (Zimmerman and Kirsch, IEEE Trans. Comm. Tech, Apr. 1967)
- **Multicarrier transmission is optimum use of channel eigenmodes** (J. Holsinger, MIT PhD thesis, 1964)
- **OFDM patent #3488445** (R.W. Chang, filed 1966)

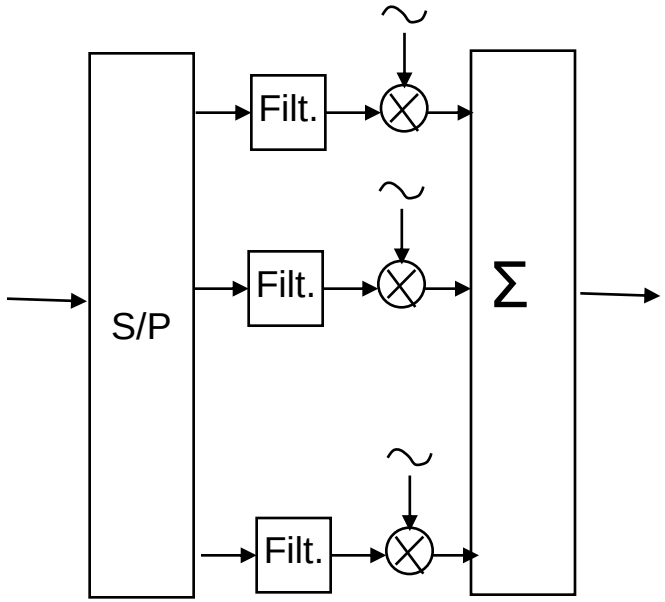

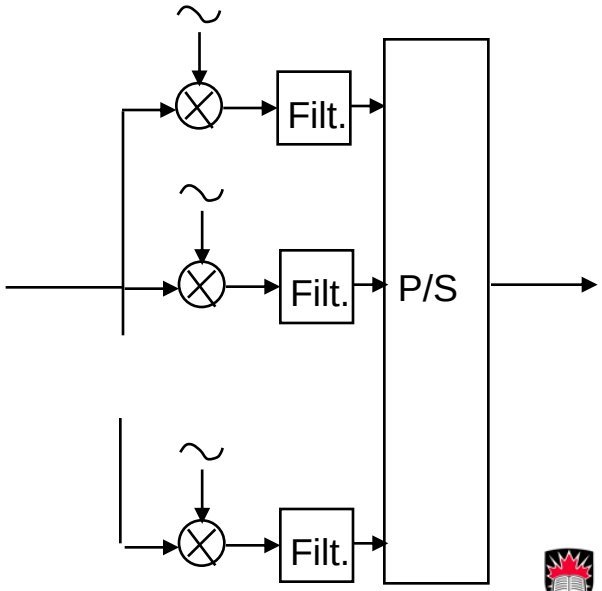

Carleton UNIVERSITY

FFT Processing: OFDM Becomes Practical

- **Application of FFT to OFDM transmission and reception:** (Weinstein and Ebert, IEEE Trans. Comm. Tech., Oct. 1971)
- **Application to voiceband telephone modems:** (Chang and Gibby, IEE Trans. Comm. Tech., Aug. 1968, B. Hirosaki, IEEE Trans. Comm., July 1981)

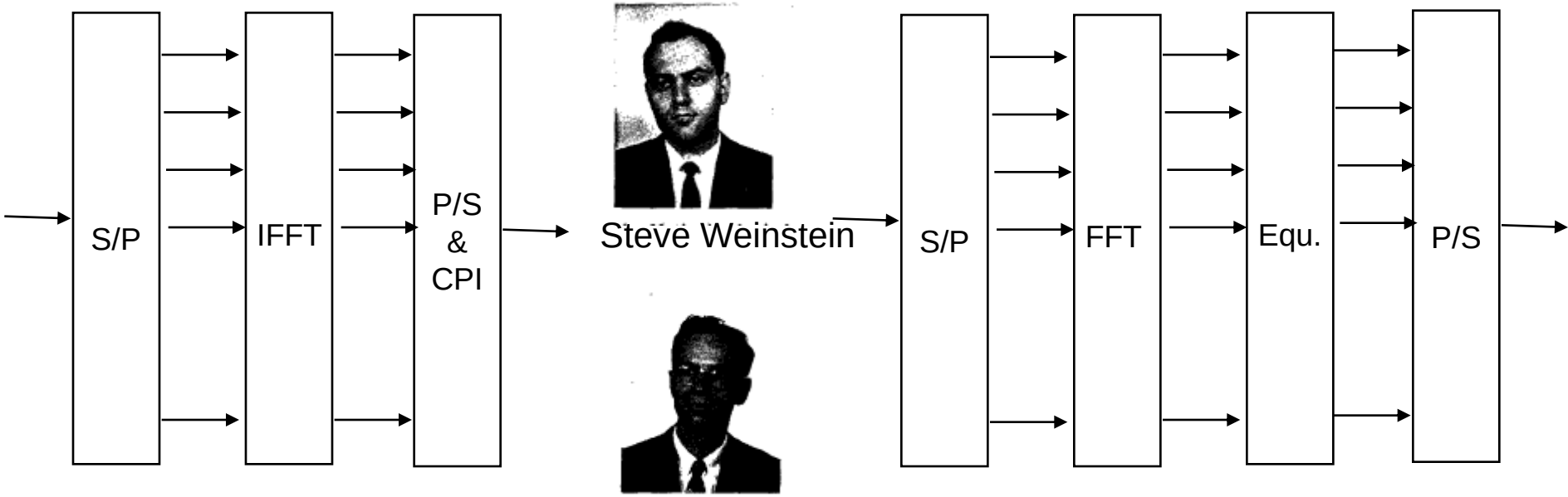

Carleton UNIVERSITY

Serial Transmission with Frequency Domain Equalization

- **Frequency domain tap calculation:** (Walzman and Schwartz, IEEE Trans. IT, Jan. 1973)
- **Fast LMS equalizer with frequency domain filtering using overlap/save block processing:** (E. Ferrara, IEEE Trans. ASSP, Aug., 1980, Clark, Parker and Mitra, IEEE Trans. CAS, Jun 1981)

IEEE TRANSACTIONS ON CIRCUITS AND SYSTEMS, VOL. CAS-28, NO. 6, JUNE 1981

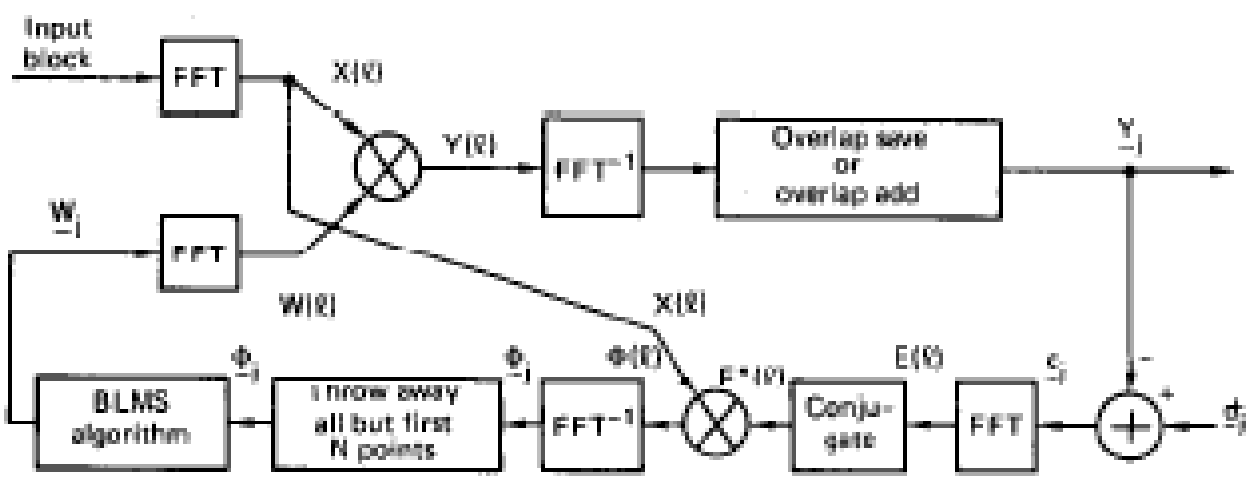

Carleton UNIVERSITY

Up to Mid 1990s: Mostly Serial Transmission and Time Domain Processing

- VSB and QAM voiceband modems
- Continuous phase modems
- Decision feedback Viterbi and multiple antenna time domain equalizers
- LMS, RLS, fast RLS equalizer adaptation
- The TDMA and CDMA rivalry: 2G and 3G cellular systems: GSM, IS-95, 3GPP, 3GPP2,..
- Trellis and turbo codes
- Impulse-based ultra wideband
- North American digital TV - ATSC

We Get Serious About Frequency Domain Transmission and Processing

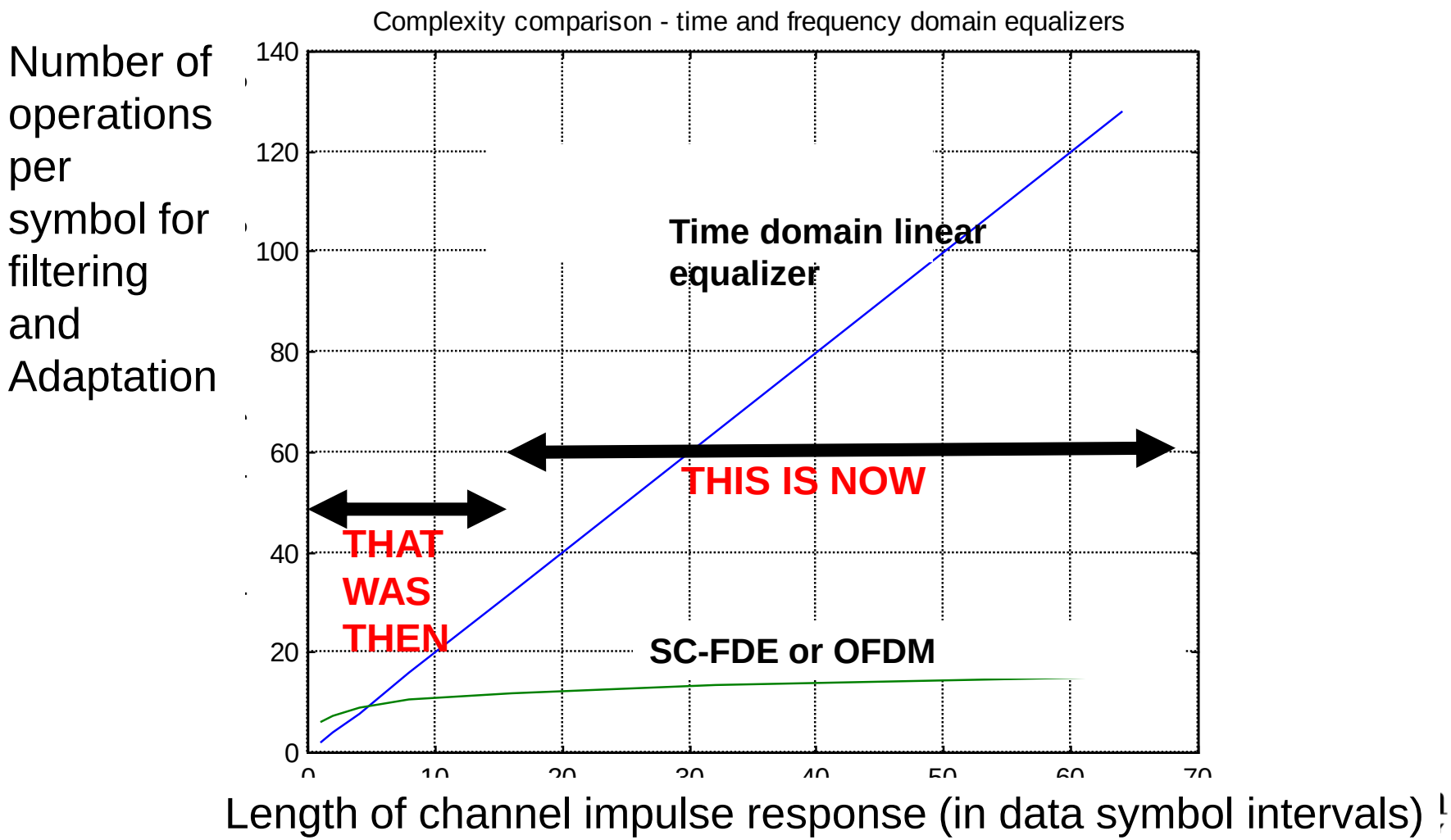

The OFDM Era (From Mid 1990s)

- Discrete multitone for ADSL
- ITU/ETSI digital video/audio standards
- IEEE 802.11a/g (WiFi) and 2 out of 3 IEEE 802.16a (WiMAX) standards
- Multicarrier ultra wideband
- Proprietary systems like Flarion's

- Enhancements from adaptive bit loading, smart decoding, iterative MIMO…

- The downside: sensitivities to hardware impairments: nonlinear power amplifiers, oscillator frequency offset and phase noise.

Serial Transmission Again – With Block Processing and Frequency Domain Equalization

- H. Sari, G. Karam, and I. Jeanclaude, “Channel equalization and carrier snchronization in OFDM systems,” in Proc. Int.Tirrenia Workshop Digital Commun., (Tirrenia, Italy), Sept. 1993.

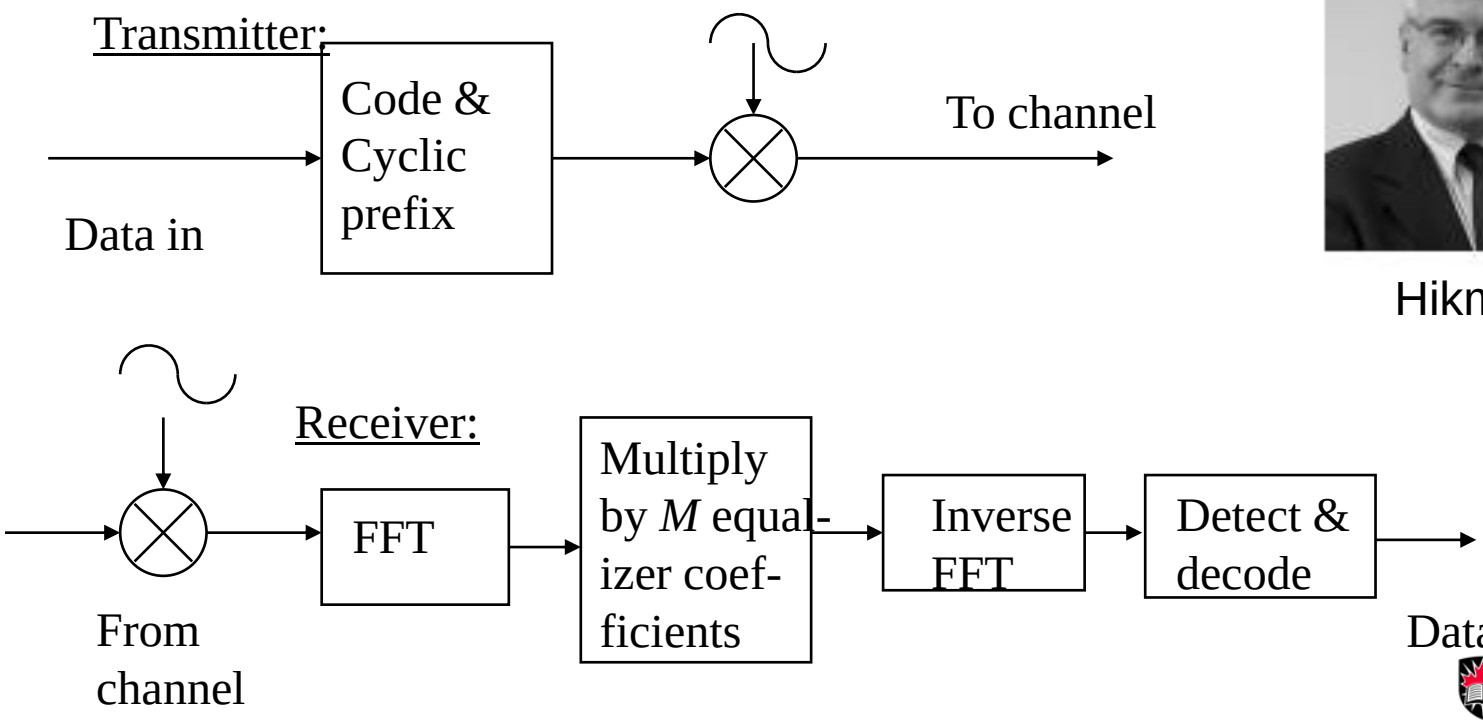

Hikmet Sari

Linear and Decision Feedback Frequency Domain Equalization

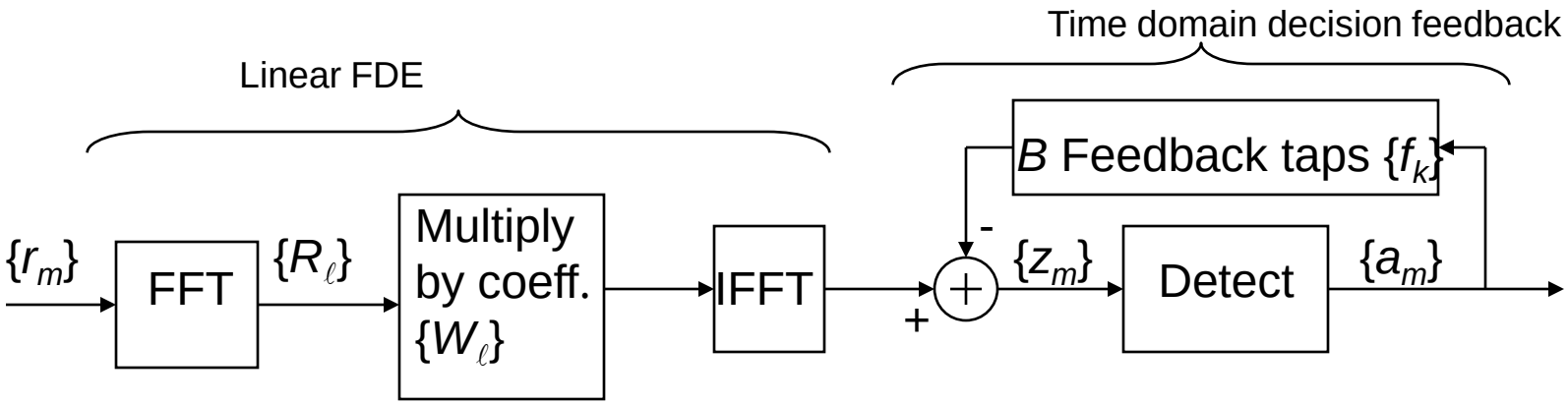

$$\text{DFE output} = z_m = \frac{1}{N_M}\sum_{\ell=0}^{N_{cu}-1} W_\ell R_\ell \exp(j\frac{2\pi}{N_{cu}}\ell m) - \sum_{k\in F_B} f_k^* a_{m-k}$$

$$\text{where } R_\ell = \sum_{m=0}^{N_{cu}-1} r_m \exp(-j\frac{2\pi}{N_{cu}}\ell m)$$

F_B is a set of B feedback tap delays corresponding to the B largest channel Impulse response postcursors.

$$\text{Error } e_m = z_m - a_m. \quad (\text{Minimize MSE} = \mathrm{E}(|e_m|^2).)$$

Carleton UNIVERSITY

Iterative Block Decision Feedback Equalization (IBDFE) and Turbo Equalization (TE)

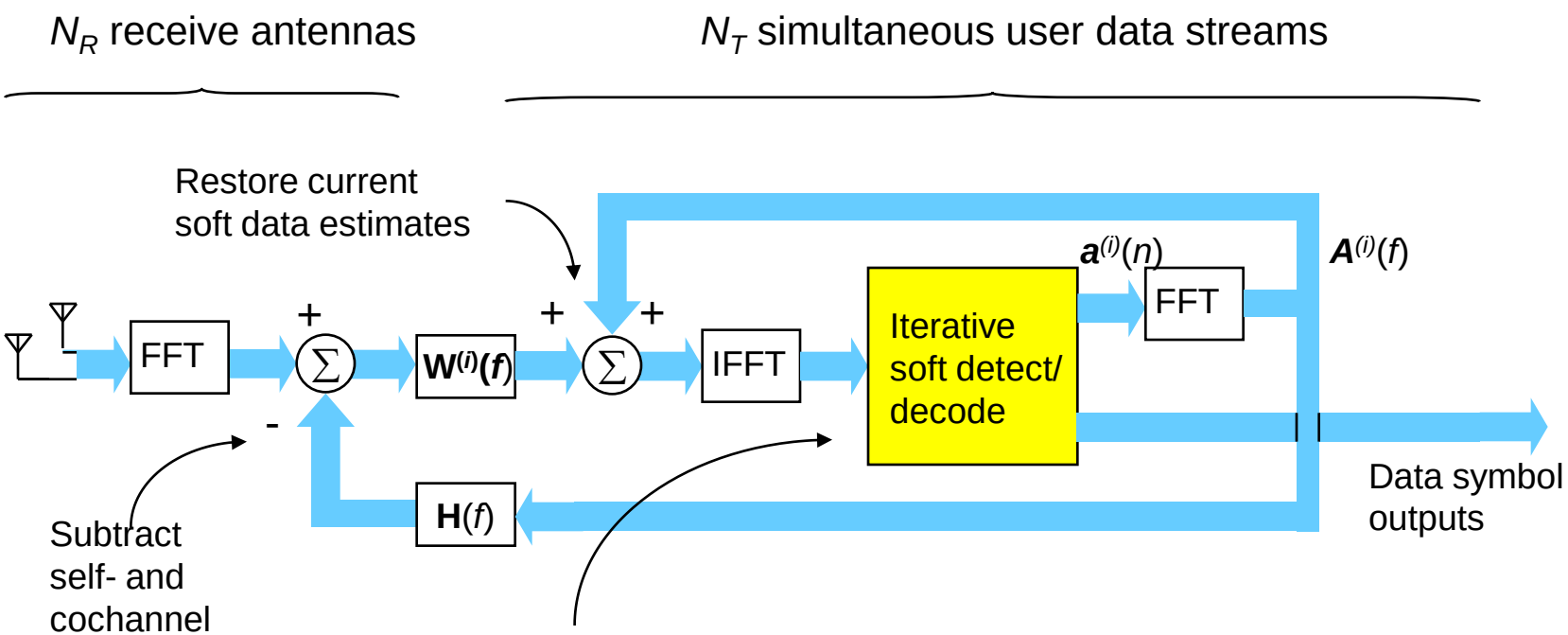

At each iteration, outputs conditional means of all users' data symbols.
For turbo equalization, includes de-interleaving, decoder extrinsic info output and re-interleaving.

Carleton UNIVERSITY

21st Century: Serial and Multicarrier Transmission Coming Together

- In IEEE 802.16a (leading to WiMAX) standards body there were single carrier, OFDM and OFDMA "lobby" groups: 802.16a standard includes all 3 modes. Subsequent 802.16 standards and WiMAX emphasize OFDMA.

- EU WINNER Project and 3GPP-LTE standards body recommend OFDMA in the downlink and SC-FDMA (or DFT-precoded OFDM) in the uplink of wide area cellular systems.
  - Complementary modes: downlink OFDMA with its spectral flexibility, and uplink SC-FDMA with its robustness to mobile terminal hardware impairments.

- SC-FDMA can be considered a special case of OFDMA – one with low PAPR properties.

A Generalized Multicarrier Transmission Scheme: DFT-Precoded OFDM (or SC-FDMA)

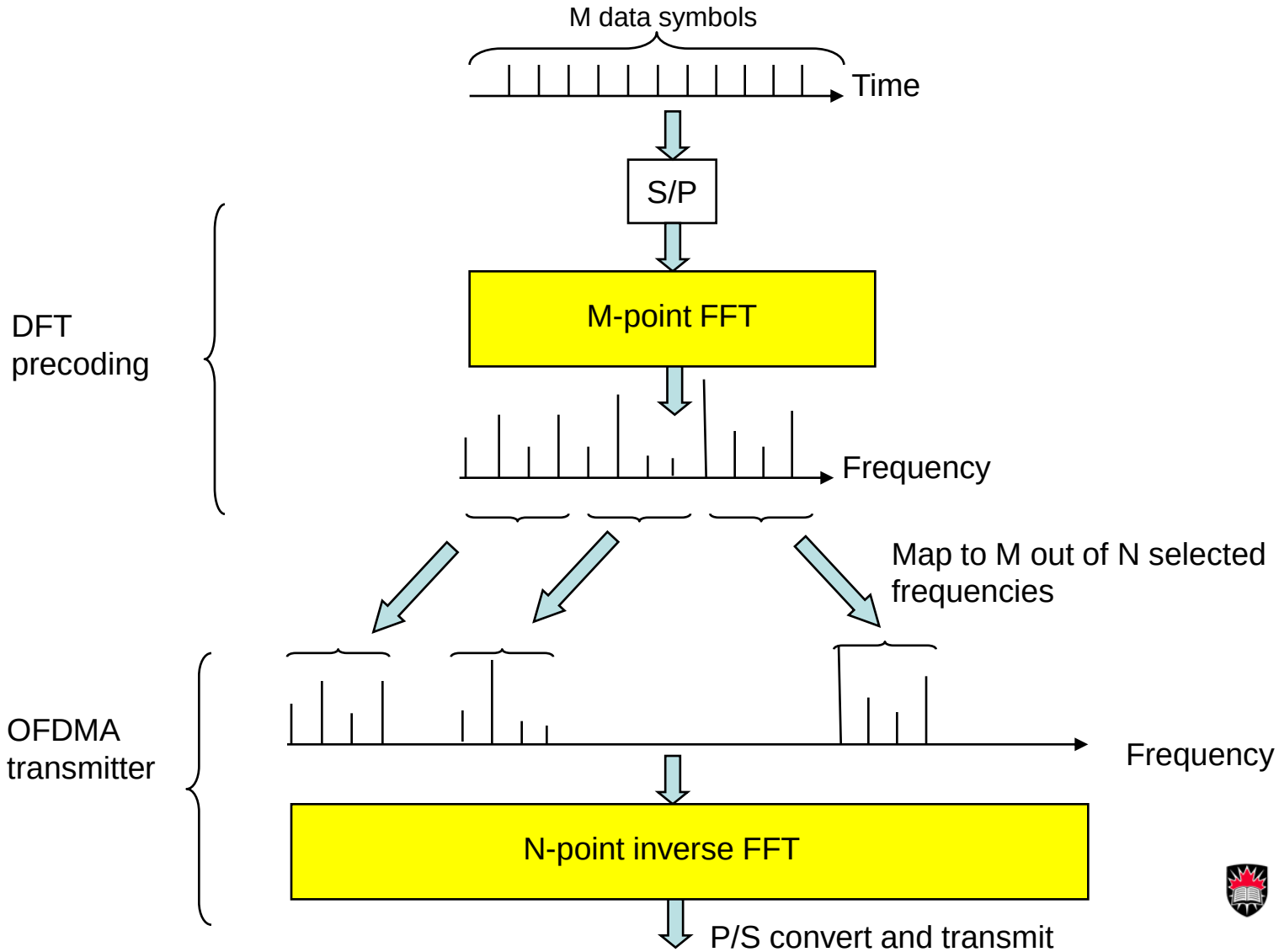

Different forms of DFT-Precoded OFDM

- Contiguous mapping **(SC-FDMA)** → **equivalent to single carrier** with 0% rolloff sinc pulses

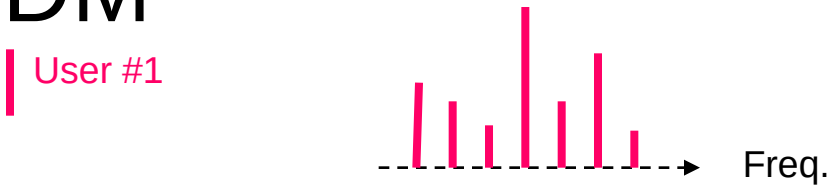

- Equally-spaced subcarriers, with different users frequency-interleaved **(IFDMA)** → **equivalent to spread-spectrum single carrier**, with low PAPR

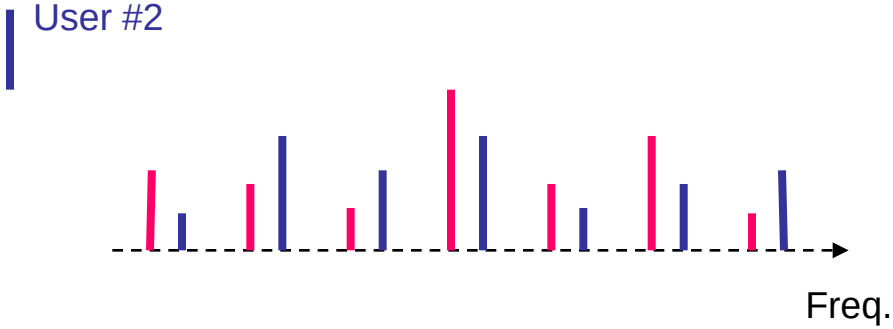

- Equally-spaced blocks, with different users' blocks interleaved **(B-IFDMA)** → **not equivalent to pure single carrier, but with lower PAPR than equivalent OFDMA**

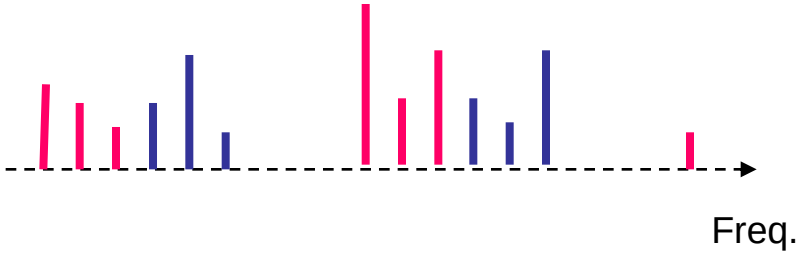

- Frequency-multiplexed pilots → **not equivalent to pure single carrier, but with lower PAPR than equivalent OFDMA**

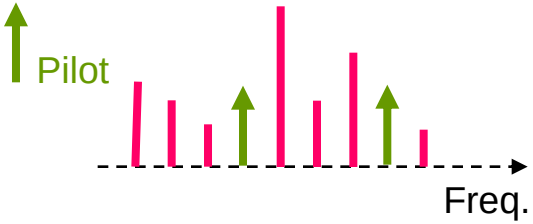

Carleton UNIVERSITY

Power Amplifier Linearity Requirements and Cost

- The greater the modulation scheme's peak to average ratio PAPR), the greater the required backoff, and the greater the required maximum rated power to achieve the link budget.

- <u>HPA cost rises sharply with maximum power rating.</u>

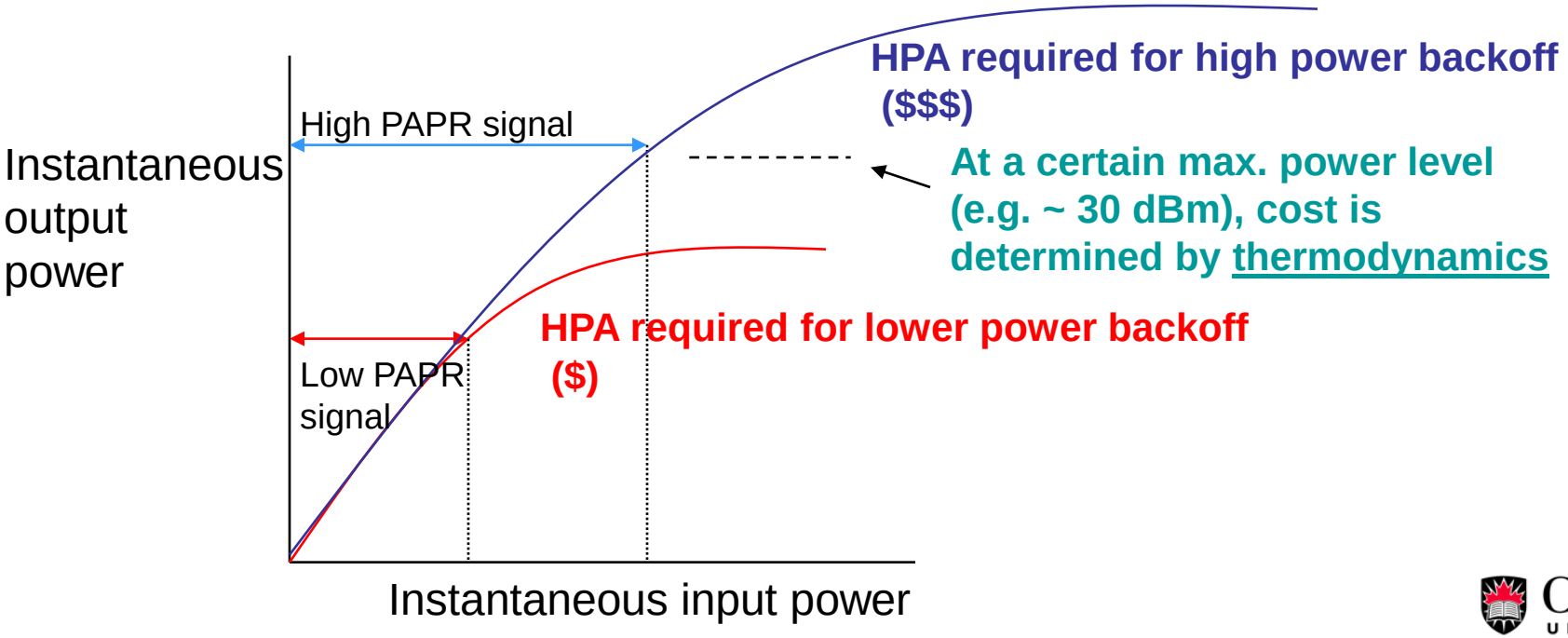

Carleton UNIVERSITY

Serial Modulation and OFDM Power Spectra with No Nonlinear Distortion

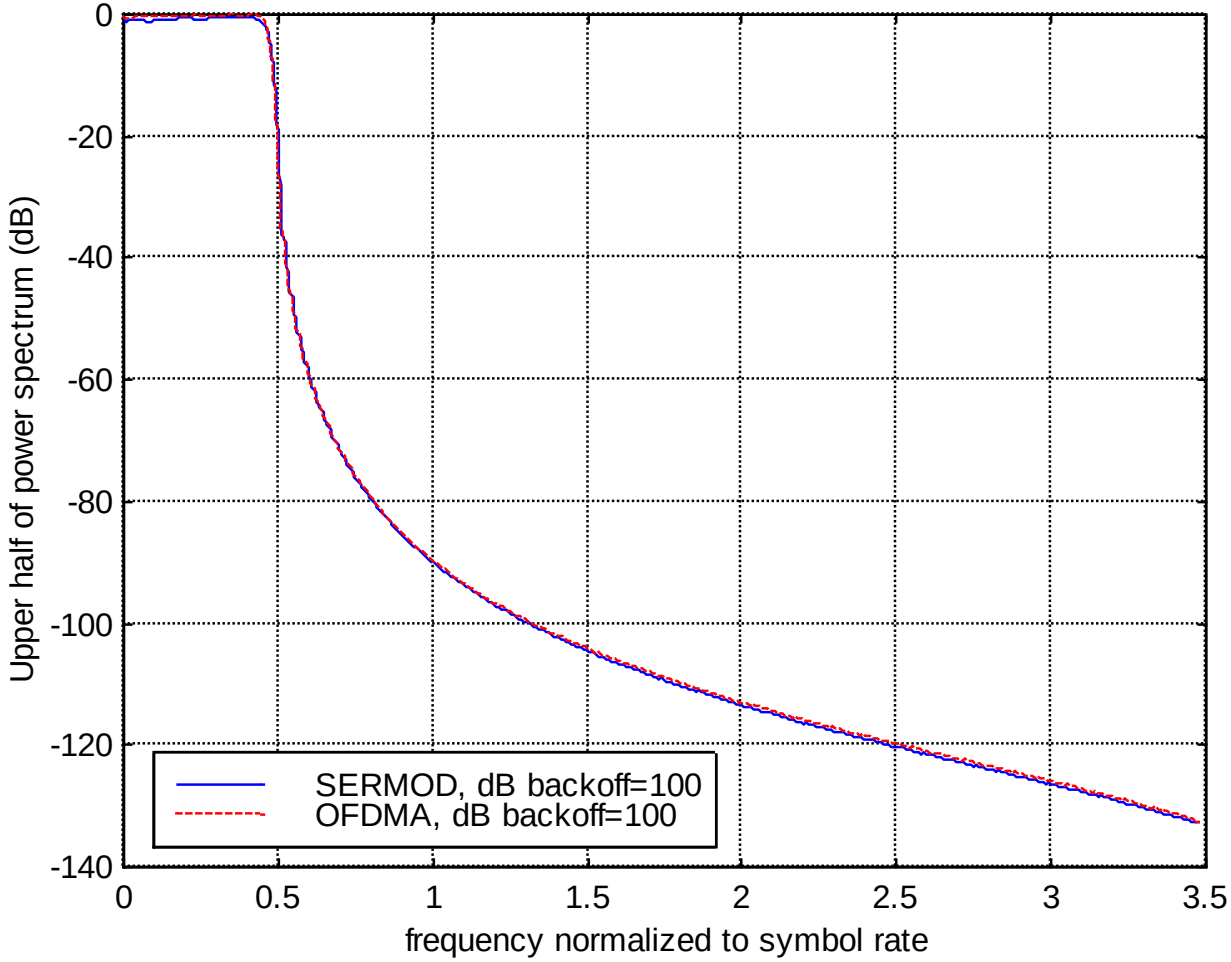

Carleton UNIVERSITY

Comparison of Backoff Required for OFDM and Serial Modulation with QPSK Modulation and 0% Excess Bandwidth

Rapp model parameter *p*=2
(HPA exhibits significant nonlinearity

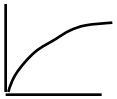

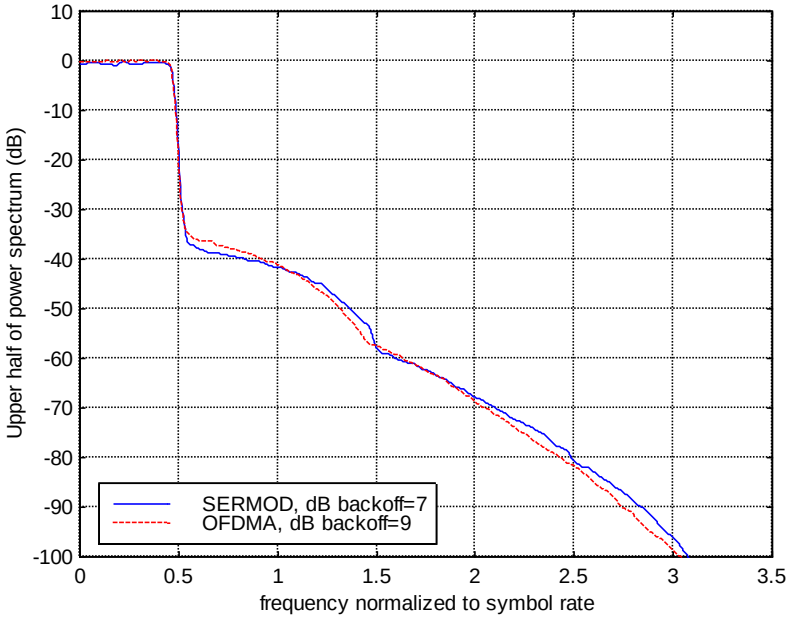

Rapp model parameter *p*=10
(HPA approximates an ideal linear clipper)

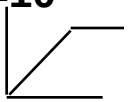

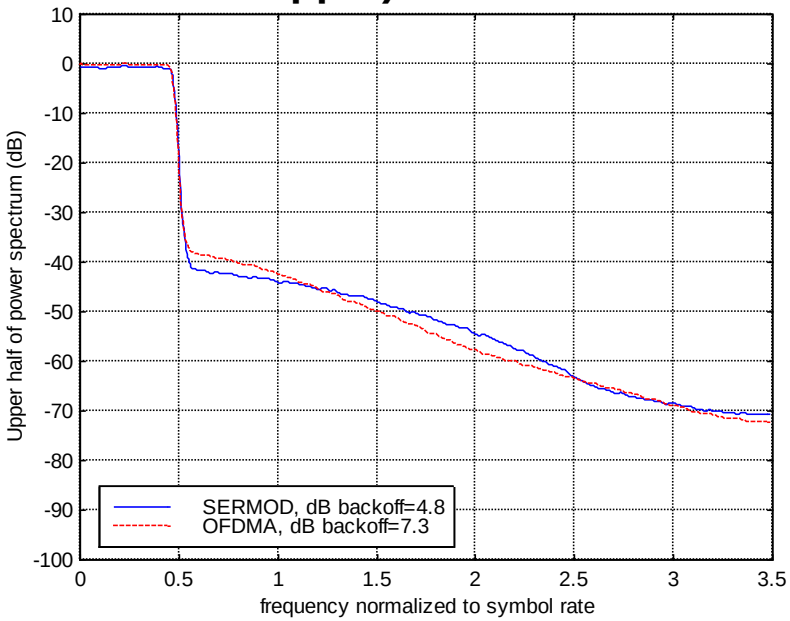

Backoff difference between OFDM and serial mod. about 2 dB with *p*=2 and about 2.5 dB with *p*=10.

Carleton UNIVERSITY

Dealing with Phase Noise and Frequency Offset

OFDM:

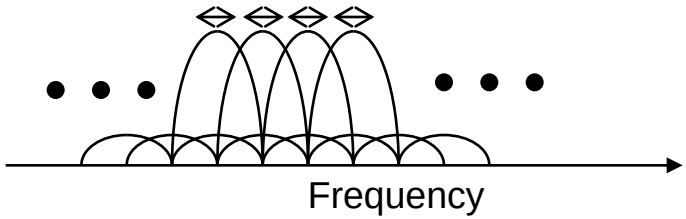

Phase noise and frequency offset cause inter-subcarrier (and therefore intersymbol) interference.
Remedy: complex linear processing in the frequency domain.

Single Carrier:

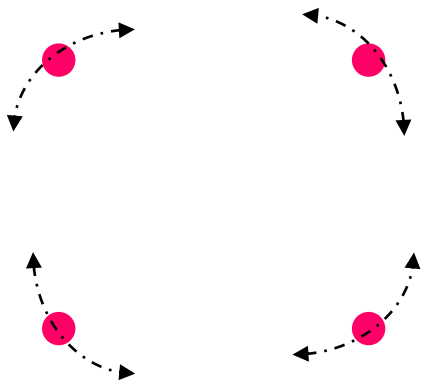

Phase noise and frequency offset cause time domain rotation of serial data symbols.
Remedy: decision-directed phase locked loop processing at equalizer output.

Future Trends

- OFDM transmission and frequency domain signal processing will remain dominant – spurred by (among other things):
  - Intelligent use of “white space” spectrum (cognitive radio)
  - Intelligent frequency reuse in mesh/relay wireless networks
- DFT-precoded OFDM (SC-FDMA) will continue to have its place in the sun, as a special version of, and complementary to, OFDM.